ACCESSORIES (Steering Systems and Components)
Serial Nbr Range: 1994 _Up

Steering/Tilt Mount System-Rotary(14144A)

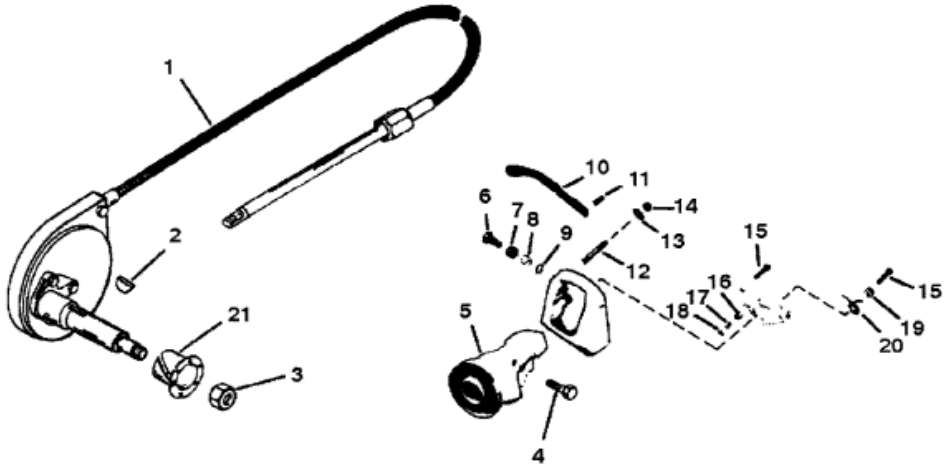

17403

Parts List

Ref	Class	Part	Description	Qty	Comment	Footnote
-		14144A__	STEERING/TILT MOUNT, Rotary	1		
1		11110A__	CABLE ASSEMBLY (See Note #	1		
2	28	91800	KEY, Woodruff	1		
3	11	20220	NUT, (.500-20)	1		
4	10	44416	SCREW SET	1		
5		14119T	POST	1		
6		NSS	NOT SOLD SEPARATE, SCREW	2	(1.50)	
7	11	22024	NUT, (.437-14)	2		
8	23	48237	BUSHING	2		
9		NSS	NOT SOLD SEPARATE, QUAD F	2		
10		48224	LEVER	1		
11		NSS	NOT SOLD SEPARATE, PIN	1	Detent	
12	16	29208	STUD	4		
13	12	26825	WASHER, (.328 x .750 x .06)	4		
14	11	35814	NUT, (.312-24)	4		
15		NSS	NOT SOLD SEPARATE, SCREW	3	(1.25)	
16	17	20009	PIN	1		
17	24	35227	SPRING	1		
18	19	20011	WELCH PLUG	1		
19		NSS	NOT SOLD SEPARATE, SPACEI	1		
20		NSS	NOT SOLD SEPARATE, SPRINC	1		
21	23	28104	BUSHING	1		